ALUFAST
INSTALLATION INSTRUCTIONS

SAFEHINGE PRIMERA

EXTREME DUTY FINGER GUARD

Document No: SII052
Document Revision: 1

Product codes :FAST-G2-1800 & FAST-G3-1800

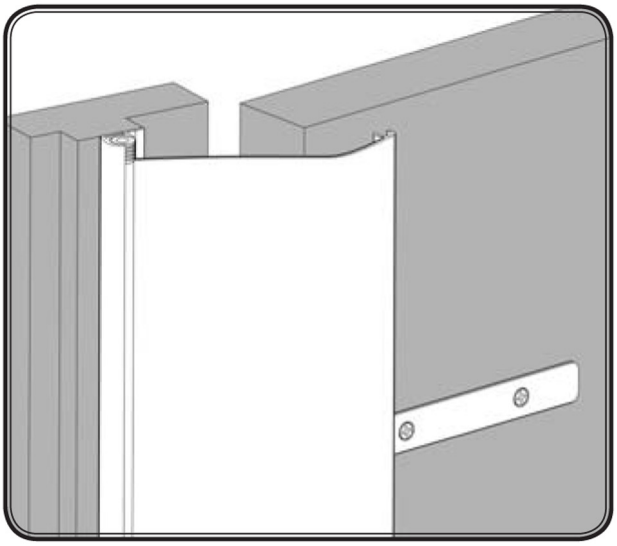



Single swing Double swing

DESIGNED FOR

Door thickness

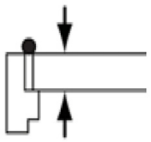

54 mm max

Opening angle

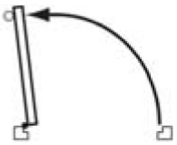

100° max

Clear width

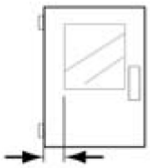

150 mm min

Kickplate

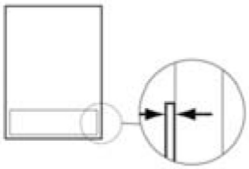

3 mm max

PARTS LIST

	FAST G2	FAST G3
1) Alufast assembly	1	1
2) Connector	2	3
3) Guiderail	2	3
4) 1 mm Packer	6	6
5) Large screw (No.8 x 25 mm)	4	6
6) Small screw (No.6 x 18 mm)	4	4

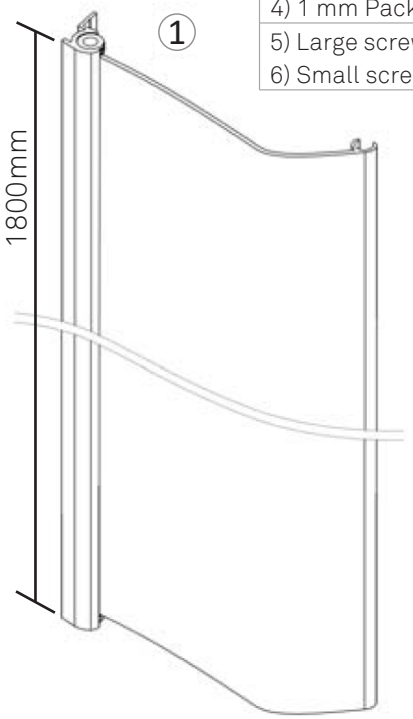

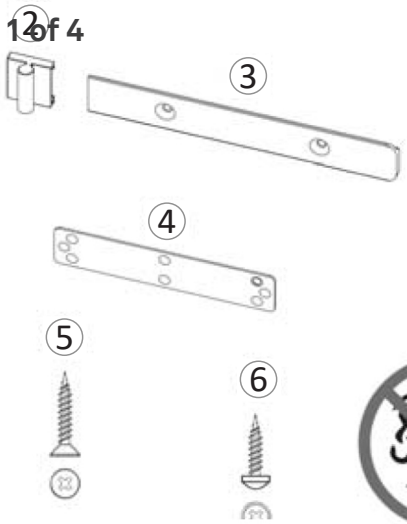

TOOLS REQUIRED



2mm drill bit



Pencil / marker



PZ2 screwdriver



IMPORTANT:

Product should operate quietly. If excessive noise is heard after installation - see pages 2-4

A)

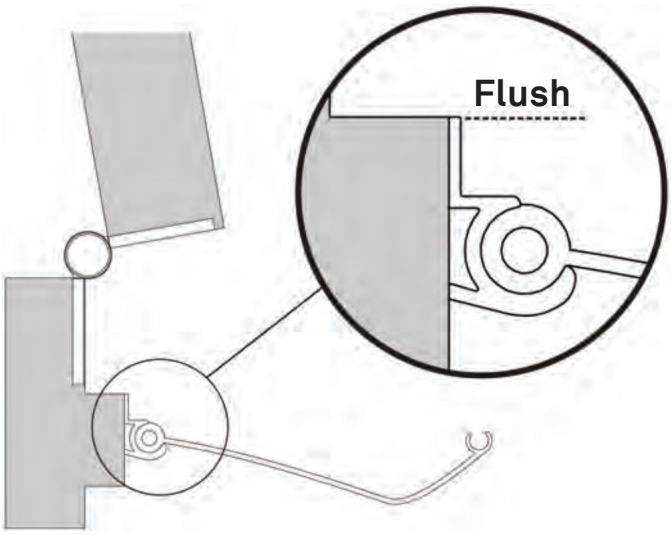

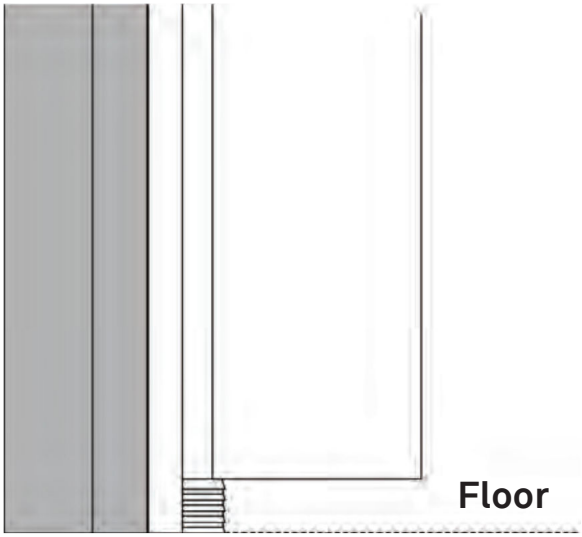

B)

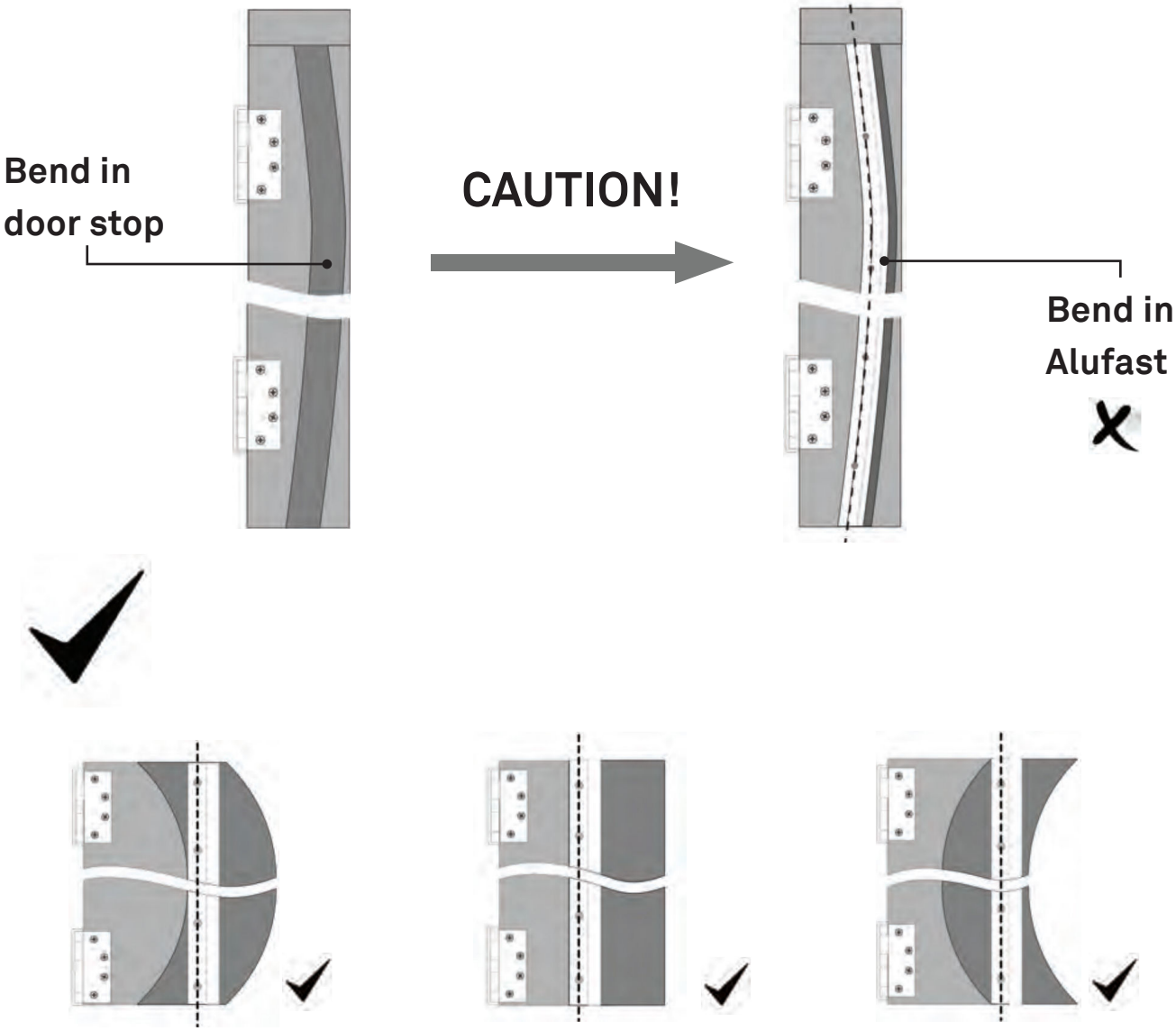

C)

i)

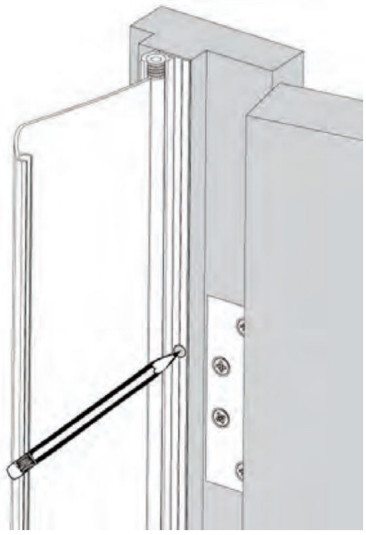

ii)

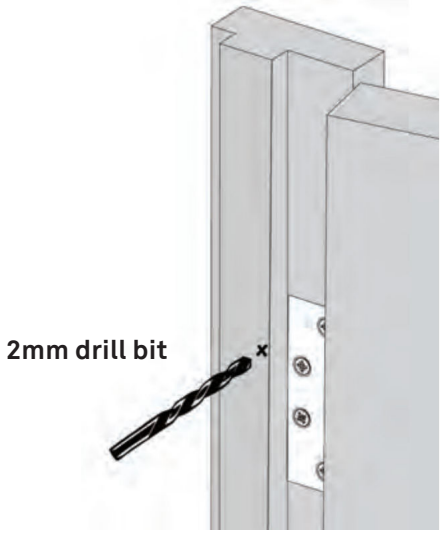

D)

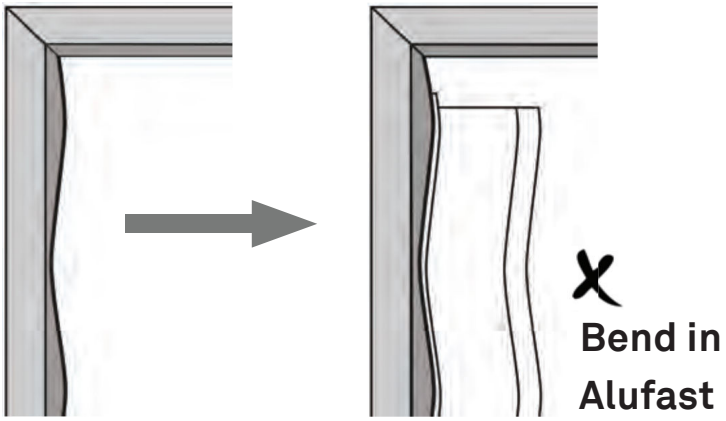

i)

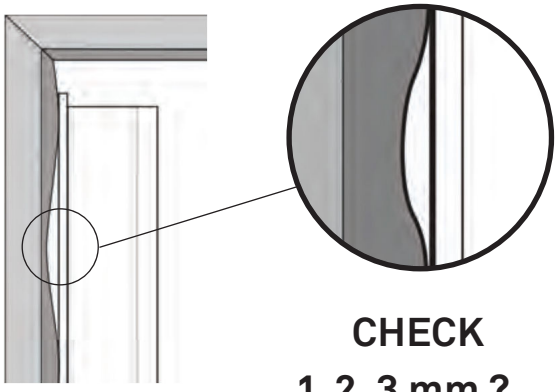

ii)

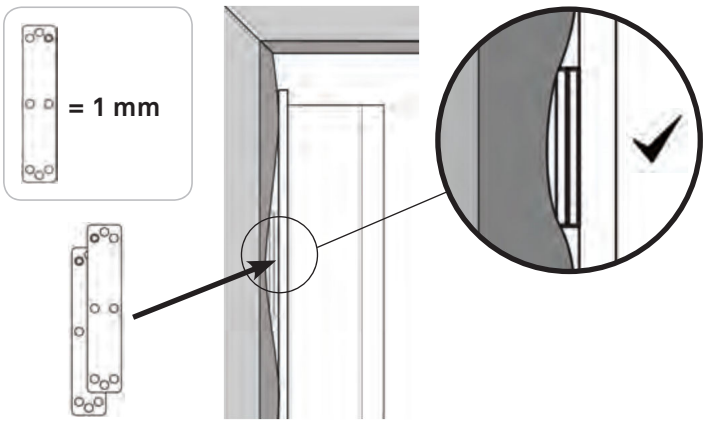

iii)

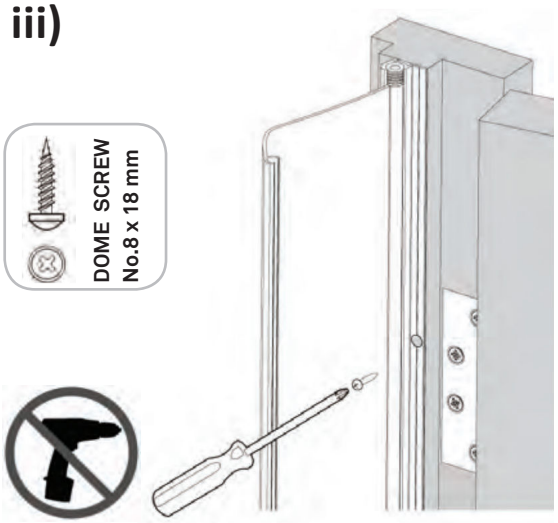

E)

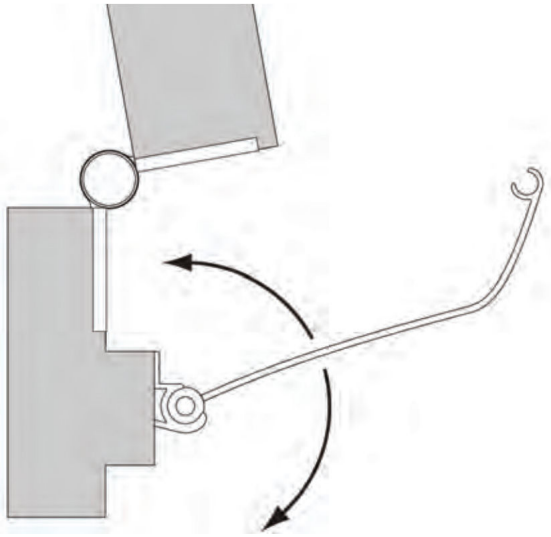

TEST



Smooth
Free moving
Quiet

-> Step F



Noise
Tightness
Scraping

-> Step B

F)

i)

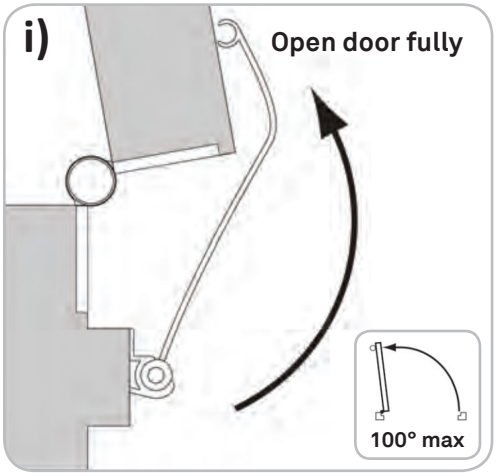

ii)

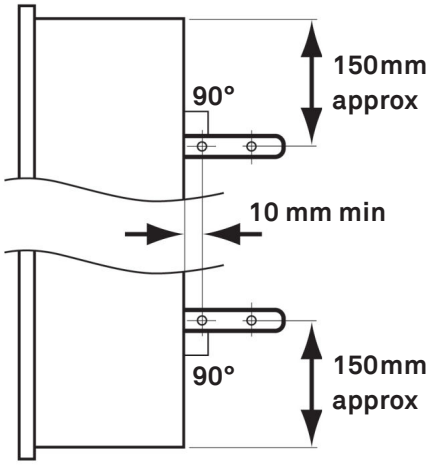

iii)



2 mm drill bit

G)

i)

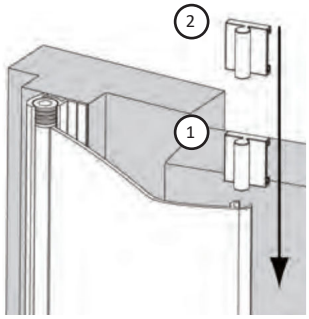

Fix lowest first

ii)

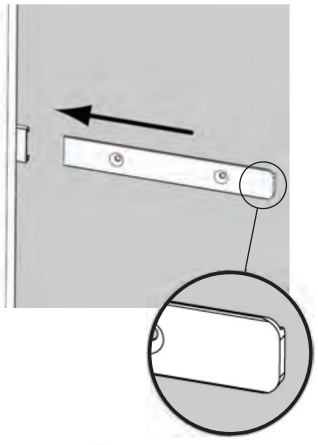

Rounded end out

iii)





